TOYOSTOVE®

TOYOTOMI

LASER CLEAN HEATING SYSTEM/VENTED HEATER
INSTALLATION AND OPERATION INSTRUCTIONS

LASER CLEAN VENTED

MODEL Laser 30

(Type C)

INTERTEK ETL LISTED C US

IMPORTANT

READ AND UNDERSTAND INSTRUCTIONS BEFORE INSTALLING OR USING HEATER.
RETAIN INSTRUCTIONS FOR FUTURE REFERENCE. CHECK LOCAL CODES AND ORDINANCES FOR PERMITTED USE.

CONTENTS

SECTION A:
Specifications 2
SECTION B:
Safety Tips for Operation 3
SECTION C:
Fuel Guide 4
SECTION D:
Operating Controls and Part Names 5
SECTION E:
Operation
Before Ignition 8
Operation 8
Turning Heater Off 11
SECTION F:
Routine Maintenance 12
SECTION G:
Troubleshooting 14
SECTION H:
Long Term Storage 15
SECTION I:
Installation
Tools Needed for Installation 16
Standard Installation Parts 16
Accessary Parts 18
Safety Tips for Installation 21
Installation of Heater and Flue Pipe 22
Permanent Wiring Installation 28
SECTION J:
Fueling 29

SECTION A: SPECIFICATIONS

Model:	Laser 30
Heater Efficiency:	90% (1)
Heat Rating:	High - 15,000 BTU/h Med - 10,000 BTU/h Low - 5,000 BTU/h
Fuel Consumption:	High - 0.108 gal/h Med - 0.076 gal/h Low - 0.040 gal/h
Fuel system:	External tank (2)
Fuel Type:	ASTM D3699 1-K Kerosene, ASTM D396 Low Sulfur No.1 Fuel Oil, or ASTM D975 Ultra Low Sulfur Diesel (ULSD)
Dimensions (W × H × D):	16-15/16" × 21-3/4" × 13-9/16"
Weight:	31 lbs. Empty
Vent Pipe Hole:	2-3/4" ~ 3" diameter
Maximum Length of Vent Pipe System:	10 ft., 3 bends or less
Electrical Rating:	120 Volts AC, 60 Hz Preheat - 260W Burning - 26W
Typical Room Size (3):	600 square feet (0°F) 720 square feet (20°F)

(1) Heat and vaporized water are produced by the combustion process of this heater. This rating does not take into account heat loss due to condensation of water vapor.

(2) External tank to be purchased from local suppliers.

(3) 0° F Heat Load = 24 BTU/ft^2/hr
20° F Heat Load = 20 BTU/ft^2/hr
Room size for which this heater is suitable will vary depending on outside temperature, house insulation, window size, and other factors.

SECTION B:
SAFETY TIPS FOR OPERATION

CAUTION: Heater and vent pipe system must be properly installed before operation. Please follow instructions under "Installation", Section I.

1. Never use any fuel other than ASTM D3699 1-K Kerosene, ASTM D396 Low Sulfur No.1 Fuel Oil, or ASTM D975 Ultra Low Sulfur Diesel. NEVER USE GASOLINE. Use of gasoline can lead to uncontrollable flames, resulting in destructive fire.

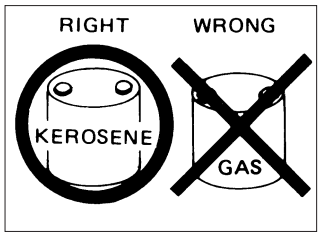

2. Due to high surface temperatures, keep heater away from children, furniture and clothing while in operation (See Page 22).

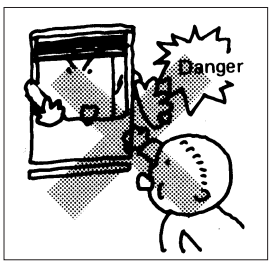

3. To prevent abnormal operation and prolong heater life, be sure to perform routine maintenance (See Pages 12-13).

4. Never store or transport fuel in other than a metal or plastic container that is clearly marked, "KEROSENE", "NO. 1 FUEL OIL", or "ULTRA LOW SULFUR DIESEL". Never store fuel in the living space.

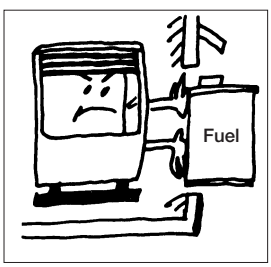

5. Operating Temperature Range
   Use heater within the range of temperatures indicated in the right figure.

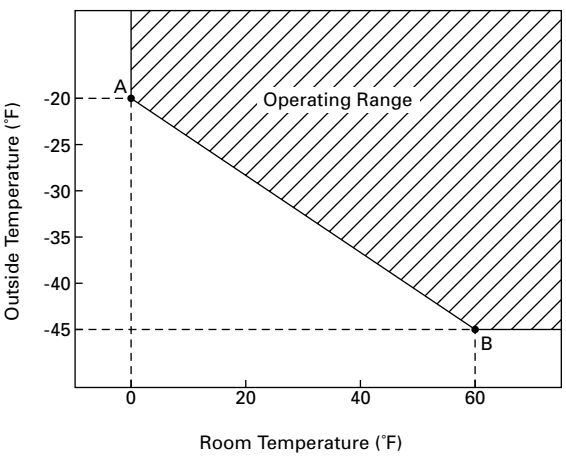

Point A: If outside temperature -20°F
than room temperature has to be 0°F or above

Point B: If outside temperature -45°F
than room temperature has to be 60°F or above

SECTION C:
FUEL GUIDE

The Toyostove Laser 30 is designed for use with ASTM D3699 1-K Kerosene, ASTM D396 Low Sulfur No.1 Fuel Oil, or ASTM D975 Ultra Low Sulfur Diesel (ULSD). Use of low-quality fuel will cause burner performance to drop, leading to abnormal combustion and reduced heater life.

Purchase only ASTM D3699 1-K Kerosene, ASTM D396 Low Sulfur No.1 Fuel Oil, or ASTM D975 Ultra Low Sulfur Diesel (ULSD) in non-red cans reserved exclusively for fuel and marked accordingly with the word "KEROSENE", "NO. 1 FUEL OIL", or "ULTRA LOW SULFUR DIESEL". Always store your fuel in a separate area from where you store gasoline for your power equipment to avoid accidental use of gasoline in your heater.

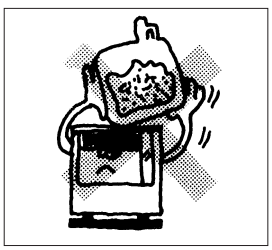

What to Buy . . .

ALWAYS : Clean and high-quality ASTM D3699 1-K Kerosene, ASTM D396 Low Sufur No.1 Fuel Oil, or ASTM D975 Ultra Low Sulfur Diesel (ULSD).

ALWAYS : Fuel free of contaminants, water or cloudiness.

NEVER : Gasoline, alcohol, white gas, camp stove fuel or additives.

NEVER : Yellow or sour-smelling fuel.

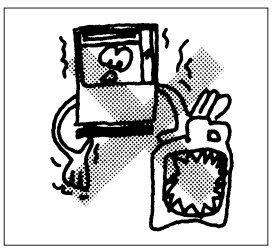

How to Store It . . .

ALWAYS : Store in a clean container, non-red in color, clearly marked KEROSENE, NO. 1 FUEL OIL, or ULTRA LOW SULFUR DIESEL.

ALWAYS : Store away from direct sunlight, heat sources or extreme temperature changes.

NEVER : In a glass container, or one that has been used for other fuels.

NEVER : For longer than six months. Begin each heating season with fresh fuel; discard at the end of season.

NEVER : In the living space.

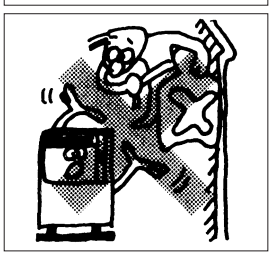

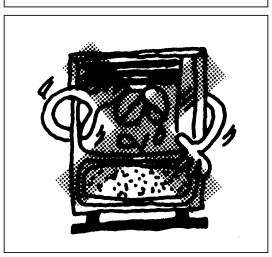

Why It is Important . . .

Good, clean fuel is essential for safe and efficient heater operation. Poor quality or contaminated fuel can cause:

- Excess tar deposits on burner and flue pipe
- Incomplete combustion
- Reduced heater life

Use of a highly volatile flammable fuel such as gasoline can produce uncontrollable flames, creating a severe fire hazard.

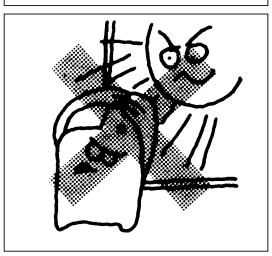

Note: The fluidity of Ultra Low Sulfur Diesel becomes worse at temperatures of 21˚F (-6˚C) and below and can "gel". This condition may cause ignition failure. To prevent congealing it is recommended to use an additive with the fuel. Check with a fuel supply company for the proper additive and mix.

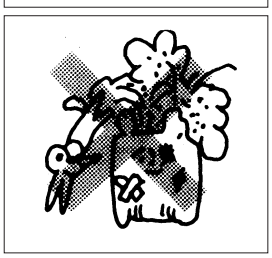

SECTION D:
OPERATING CONTROLS AND PART NAMES

Before using heater, familiarize yourself with the following operating controls and names.

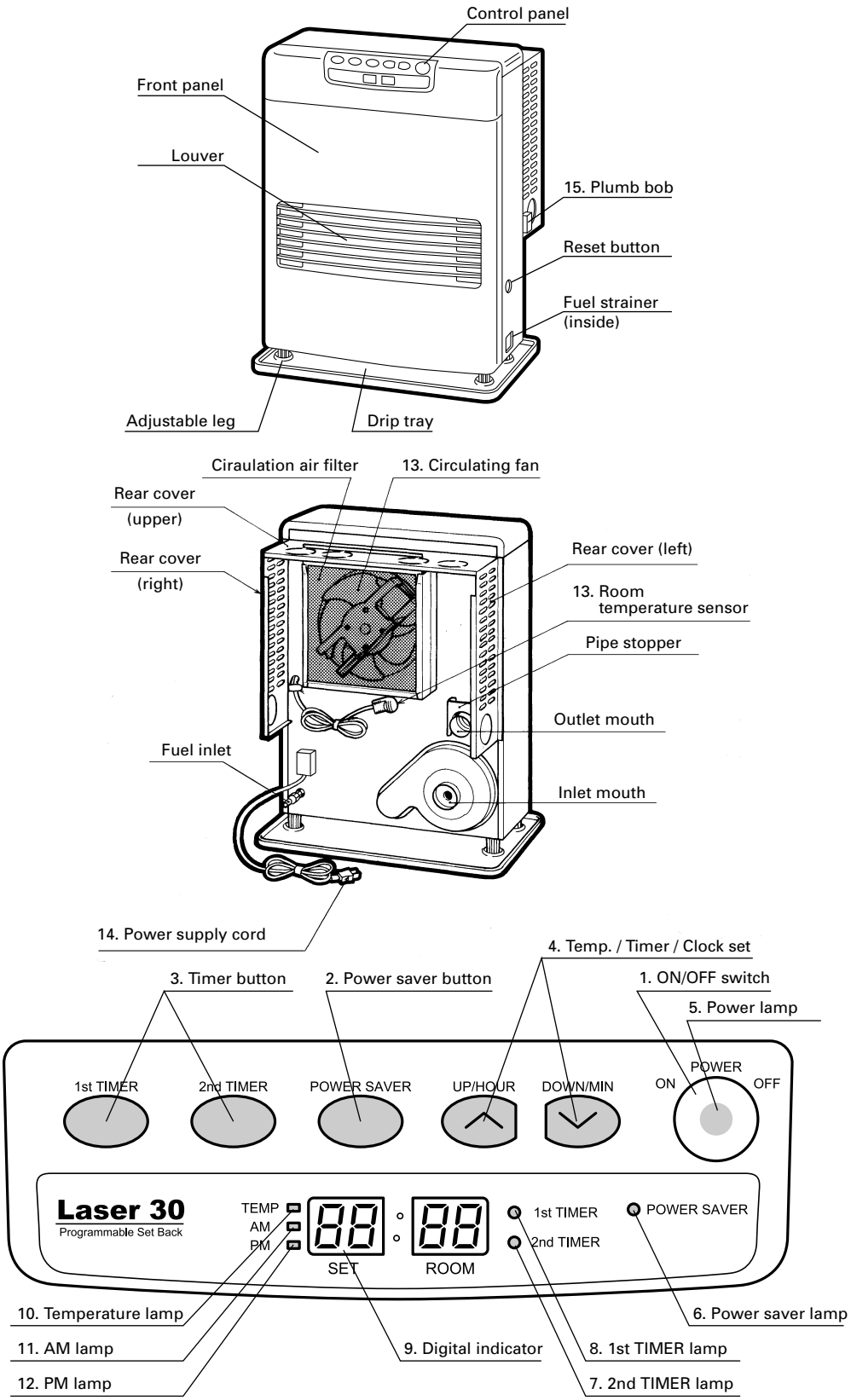

1.	ON/OFF switch:	Main switch turns heater on and off. When switched on, heater begins operation and combustion starts after preheat period.
2.	Power Saver button:	The button turns Power Saver operation mode on and off.
3.	Timer button:	The button turns Timer operation mode on and off.
4.	Temp./ Timer/Clock set:	Temp./Timer/Clock set modes can be set by pressing UP/HOUR or DOWN/MIN buttons.
5.	Power lamp:	Lit - Heater is in operation. Flashing - Pre-heating and pre-purging.
6.	Power Saver lamp	Heater operating in Power Saver mode.
7.	2nd Timer lamp:	Heater operating in 2nd Timer setting mode.
8.	1st Timer lamp:	Heater operating in 1st Timer setting mode.
9.	Digital indicator:	Displays clock, set temperature, room temperature and error code.
10.	Temperature lamp:	Lit - Digital Indicator shows set and room temperature. Flashing - Set temperature can be changed.
11.	AM lamp / PM lamp	Lit - Digital Indicator shows current time. Flashing - Current time can be changed.
12.	Circulation fan:	Three speed motor supplies high-capacity warm air flow during high combustion for heating room up quickly, and low or medium-capacity warm air flow during low or medium combustion for maintaining comfortable room temperature.
13.	Room temperature sensor:	Constantly senses room temperature and supplies information to heater so that desired room temperature can be maintained.
14.	Power supply cord:	For use in 120V, AC electrical outlet.
15.	Plumb bob:	Allows user to check if heater is level.

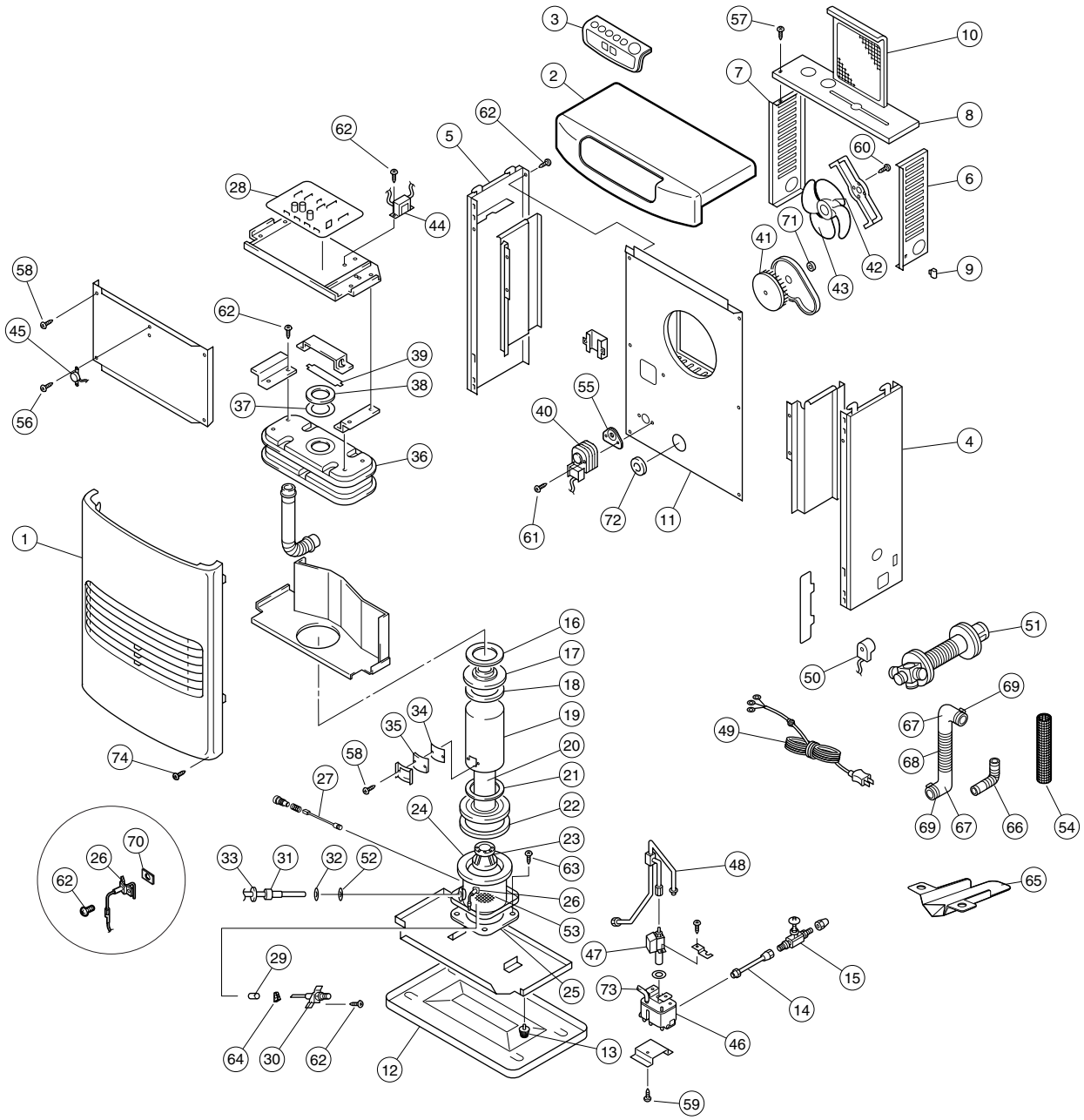

REF #	PART #	PART NAME	REF #	PART #	PART NAME	REF #	PART #	PART NAME
1	20479546	Front panel assembly	27	20479573	Burner thermistor	53	20479513	Burner mat
2	20479660	Top plate assembly	28	20479612	Main circuit board	54	20474955	Insulating cloth cover
3	20479676	Indicator lamp circuit	29	20474083	Fuel nozzle gasket	55	20479574	Blower motor gasket
4	20479563	Right side panel	30	20475834	Fuel nozzle	56	20450120	Screw for igniter unit
5	20479564	Left side panel	31	20479518	Igniter	57	20474052	Screw E
6	20479551	Rear guard right	32	17185580	Igniter gasket	58	20474051	Screw D
7	20479553	Rear guard left	33	20474920	Igniter cover	59	20475553	Screw 1P
8	20479550	Rear guard top	34	20475831	Mica window	60	20450017	Screw 1A
9	20450007	Plumb bob	35	20475881	Peep window gasket	61	20479556	Screw 1M
10	20479540	Circulation air filter	36	20479544	Heat exchanger	62	20474050	Screw C
11	20479566	Rear panel	37	20479591	Relief gasket	63	20474048	Screw B
12	20479529	Drip tray	38	20479530	Pressure relief plate	64	20479585	Outside nozzle gasket
13	20479570	Adjustable leg	39	20479531	Relief spring	65	20474925	Oil catch
14	20479552	Leveler fuel pipe	40	20479637	Blower motor assembly	66	20479584	Bent joint
15	10005597	Fusible link valve	41	20479683	Air intake fan	67	20474975	L-shaped hose
16	20479592	Joint gasket	42	20479669	Circulation fan motor	68	20474951	Inlet hose
17	20479510	Heat chamber cover	43	20479671	Circulation fan	69	20474977	Hose band
18	20479581	Upper gasket	44	20478317	Transformer	70	20479511	Flame rod gasket
19	20479509	Heat chamber assembly	45	20478306	High limit switch	71	20479567	Air damper
20	20479508	Heat element	46	20478534	Fuel sump	72	20479568	Air joint gasket
21	20479582	Lower gasket	47	20479519	Fuel pump	73	20479586	Draft tube
22	20479593	Heat chamber gasket	48	20479541	Fuel pipe assembly	74	20455862	Screw S2
23	20479543	Burner ring	49	20475535	Power supply cord	75	20479694	Instruction manual
24	20479542	Burner assembly	50	20478373	Thermistor	76	20479698	Carton
25	20479594	Burner gasket	51	20479891	Standard flue pipe			
26	20474011	Primary flame rod	52	20479521	Igniter guide gasket			

SECTION E: OPERATION

BEFORE IGNITION

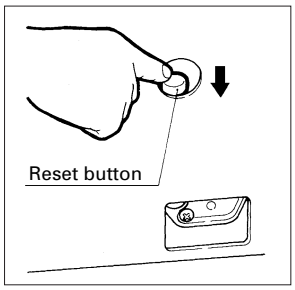

1. **Open the Valve(s)**
   Open the valve(s) of the external fuel tank.

2. **Start the Fuel flow**
   If using heater for the first time, or after heater has been out of fuel, press the red reset button once for a period of one second in order to send fuel to the fuel sump.
   Note: Make sure there is no fuel leakage from the fuel line or joints.
   Also make sure fuel tank is not too high. See installation instructions.

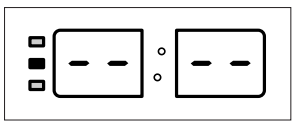

3. **Plug in the Heater**
   Plug heater into a 120V AC electrical outlet. On digital indicator pre-set "Two Dashes" will be showing.
   Note: Do not connect to an outlet shared with other appliances.

4. **Set Clock**
   Important: Clock on the heater must always be set to current time.
   Press "HOUR" and "MIN" button to correct time.
   Note: "HOUR" or "MIN" button will change the time every one (1) unit.
   Holding the button continuously will cause the time to change rapidly.
   Note: In the event of a power failure (more than approx. 20 min.) all clock and timer setting are cancelled.

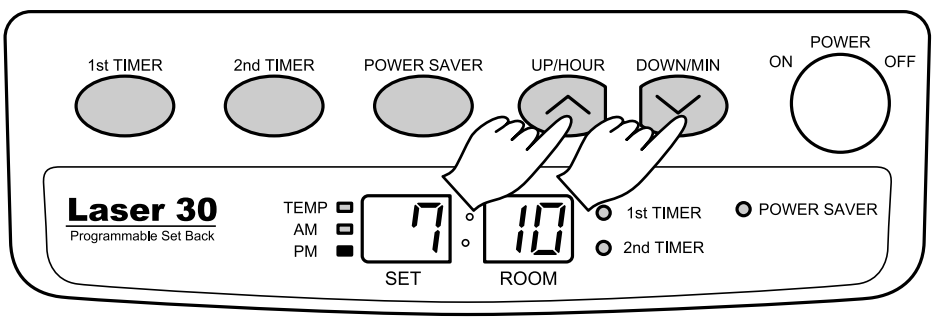

OPERATION

MANUAL OPERATION

Operation of the heater is under the direct control of the user. Heat output will, however, be automatically adjusted in accordance with the room temperature registered by the temperature sensor.

1. **Turn Heater ON**

A. Press ON/OFF switch to “ON” position. The current room temperature and the set temperature will be shown on the digital indicator. POWER lamp will start to flash and then blower motor and ignition will start. This lamp will continue to flash during the preheating time.

B. After approx. 1.5 – 4 minutes ignition will take place. (*) After ignition, power lamp will change flashing to continuous. Circulation fan will turn on after approx. 2 minutes.

Note: (*) Pre -heating depends on the room temperature.

Room temperature:	below 34°F	Approx. 4 minutes
	34°F - 61°F	″ 2 minutes
	over 61°F	″ 1.5 minutes

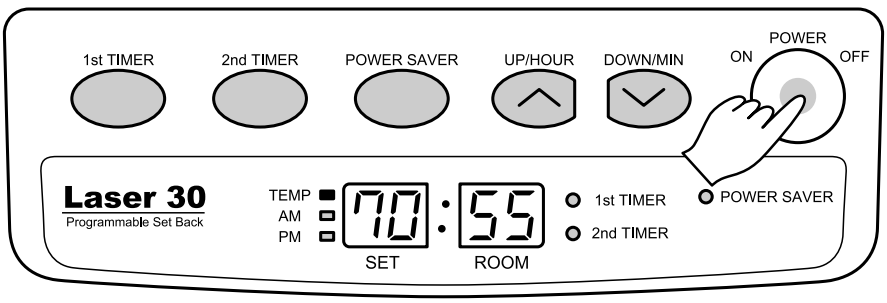

2. **Adjusting Room Temperature**

A. Press “UP” or “DOWN” button. Temperature lamp will start to flash.

Note: “UP” or “DOWN” button will change the temperature every 2°F.

B. Press “UP” or “DOWN” button as required. Room temperature can be set from 50°F to 90°F. (Initial setting : 70°F)

Note: Desired temperature setting will be displayed on the digital indicator when you set the room temperature.

C. When room temperature reaches the selected setting, heater will automatically shift to “MED” or “LOW” burning mode to maintain the desired temperature.

When room temperature exceeds the selected setting by approx. 4°F, the heater will automatically shut off. As room temperature drops, the heater will automatically re-start to maintain the desired temperature.

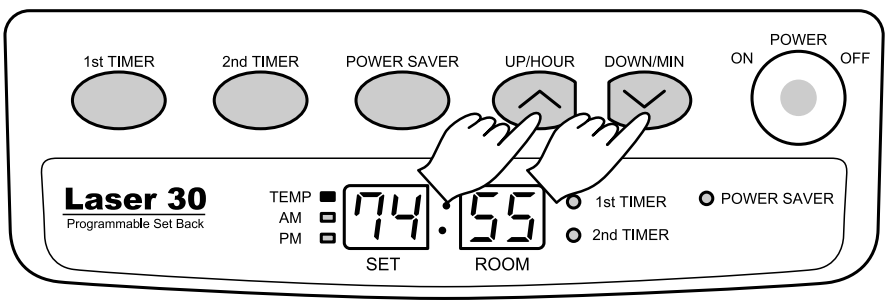

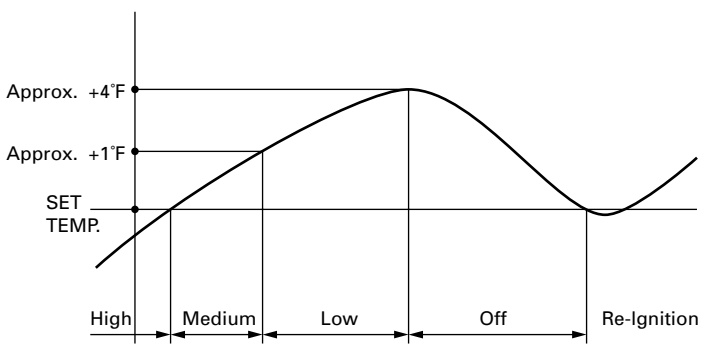

POWER SAVER OPERATION

The Power Saver mode reduces the frequency of ignition actions, to save electric consumption.

Press the POWER SAVER button “ON” to start the operation of the “POWER SAVER”.

When the room temperature exceeds the selected setting by approximately 10°F, the heater will automatically shut off. As the room temperature becomes lower than the selected setting, the heater will automatically re-start to maintain the desired temperature.

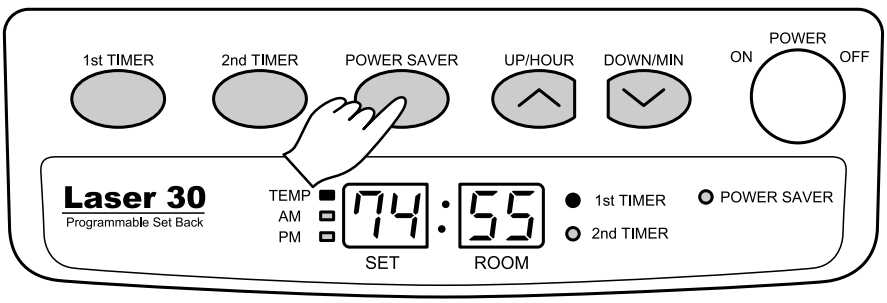

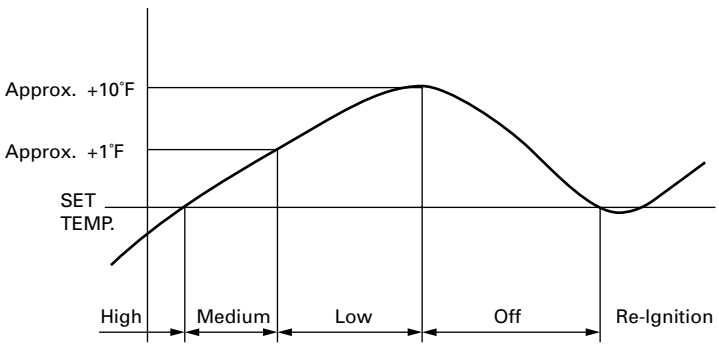

TIMER OPERATION

“TIMER” operation is programmed for particular time of hour and temperature, in order to save energy when the heater is used at night or while you leave home.

NOTE: The Laser 30 has a dual timer feature (this is not an automatic setback).

The timer feature allows a user to manually lower the temperature (set by user) until a certain time of day (set by user) by pressing a timer button. This button must be pushed each time you want the temperature to drop back. It is not automatic. There are two timer buttons on the Laser 30, 1st timer and 2nd timer. This allows for two different temperature drop backs per 24 hour period.

Example 1st Timer:
Your normal room temperature is set for 70 degrees. You work from 8 am until 5 pm. You want the room temperature to drop to 62 degrees while you are at work and you want the room to return to 70 degrees at 4 pm so it will be warm when you get home. When you leave for work you must press the 1st timer button to activate the timer. The temperature will drop to 62 degrees and return to 70 degrees at 4 pm.

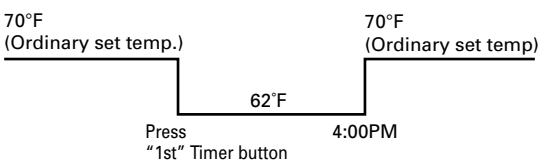

Example 2nd Timer:
Your normal room temperature is set of 70 degrees. When you go to bed, you want the temperature to drop to 65 degrees. You get up at 6 am and want the room warm when you get up. When you go to bed, you must push the 2nd timer button to activate timer. The temperature will drop to 65 degrees and stay there until the time at which you set (5:00 am) the until to return to normal temperature.

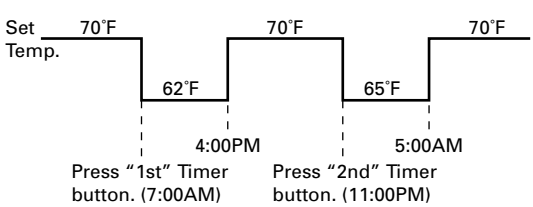

Setting 1st Timer/2nd Timer:

1. Make sure the clock is set. If not, press the hour and minute button until the correct time is indicated.
2. Press 1st Timer button. Use the up and down arrows to set the time at which you want the room to return to normal temperature. This would be 4:00PM to have the room start heating up at 4 pm. You have ten seconds from the time you push the button to enter this setting.
3. After ten seconds the display will change to Temp. The Temp side of the display will show the default 56 degrees. Use the up arrow to adjust this temperature setting to the desired 65 degrees. The 1st Timer is now set and you are in the 1st timer mode. To return to the normal operation mode, press the 1st timer button. If you want to set the 2nd Timer, press 2nd Timer button and repeat the process with the desired settings.

   To return to normal setting once a timer has been pushed (example a child press 1st timer button and you don't want the temperature lowered) just press the button again.

Note: The heater operates at the same hour and at the same temperature, if it has once been set for such hour and temperature, unless their settings are changed.

Note: If a power failure occurs (for longer than 20 minutes) while in operation, time and temperature settings are cancelled. When this happens, "AM", and "PM" lamps start flashing. Reset desired times and temperatures.

Note: To cancel the timer operation, press the "1st" Timer button or the "2nd" Timer button again. Ordinary operation will then be restored.

Note: After the heater has been set for a particuler hour and temperature it will operate at that setting each time the timer button is turned on unless the settings are changed.

MANUAL COMBUSTION

Important: This feature is for testing purpose only!

This heater also can be kept burning at desired combustion mode (High, Medium or low) manually, regardless of room temperature.

1. Press the "UP-HOUR" button and "DOWN-MIN"button at the same time for more than three (3) seconds when ON / OFF switch is "ON".
2. P1, P2 or P3 will be displayed on the Digital Indicator;
   P1 = Low mode
   P2 = Medium mode
   P3 = High mode
   Then select desired combustion mode by pressing "UP-HOUR" or "DOWN-MIN" button. "UP-HOUR" buttonchanges combustion mode to higher, "DOWN-MIN" button changes combustion mode to lower.
3. To clear, press the "UP-HOUR" button and "DOWN-MIN" button at the same time for more than (3) seconds until normal temperature display returns.

TURNING HEATER OFF

Press ON/OFF switch to "OFF" position. POWER lamp will flash and will go out. Circulation fan and blower motor continue to run for approx. three (3) minutes to cool down the heater. Make sure POWER lamp goes out when the fan stops.

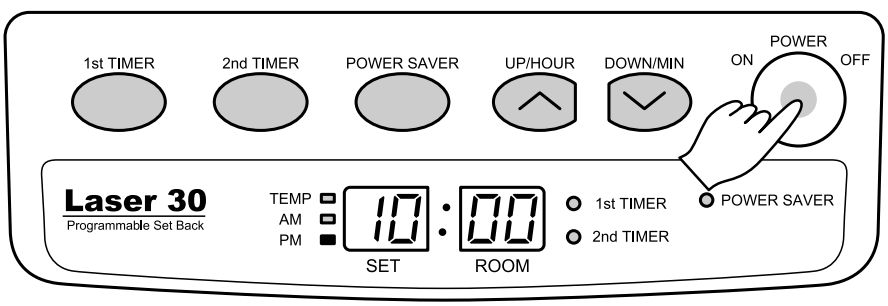

SECTION F:
ROUTINE MAINTENANCE

CAUTION: Be sure to unplug heater before performing any checks or cleaning.
CAUTION: Allow heater to cool completely before cleaning or maintenance.

FOR OPTIMUM HEATER PERFORMANCE, THE PARTS SHOWN BELOW SHOULD BE CLEANED REGULARLY:

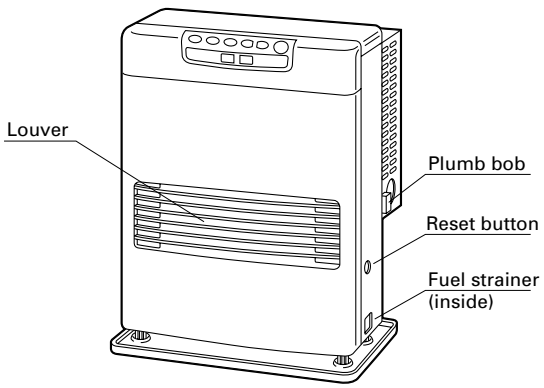

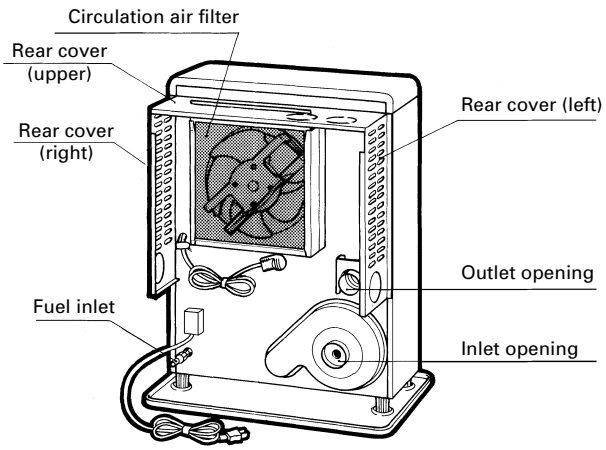

1. **Clean Louvers (ONCE A WEEK)**
   Dust and stains should be wiped off louvers with a damp cloth.

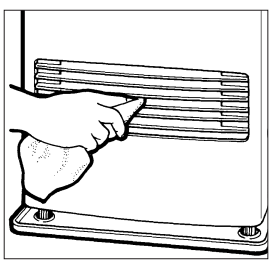

2. **Clean Circulation Air Filter (ONCE A WEEK)**
   A mesh filter is located on heater cabinet rear side. Once a week slide the filter up to remove and it should be vacuumed clean.

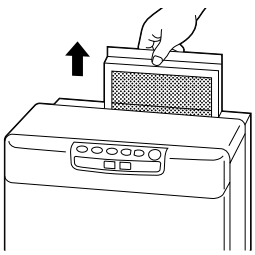

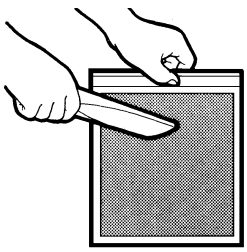

3. **Check for Fuel Leaks (REGULARLY)**
   Make it a habit to check for any sign of fuel leakage along the fuel line and at all joints. Fuel leaks may lead to risk of fire.

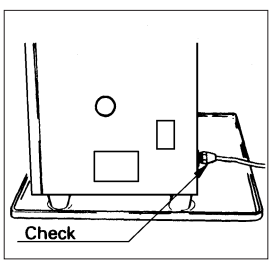

4. **Check Flue Pipe Area (ONCE A WEEK)**
   Check the flue pipe joint to make sure connection is firm. Use a vacuum cleaner to remove any dust or pet hair.

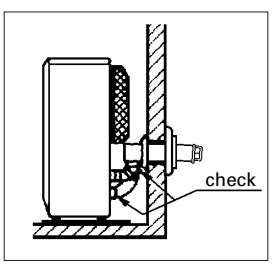

5. **Clean Fuel Strainer (ONCE A MONTH)**

The strainer of the fuel sump should be cleaned once a month and before storing heater at the end of each season.

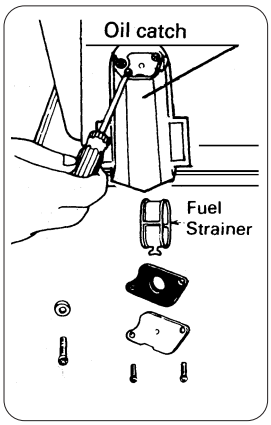

(a) Close the valve(s) of the separate fuel tank.

(b) To catch the fuel which will drain out, set the oil catch below the strainer cover, with a small container under it.

(c) Loosen the two screws from the strainer cover and remove.

(d) Remove the strainer and wash with fuel.

(e) Return the strainer to its original position. Replace strainer cover and screw to secure.

(f) Wipe away any spilled fuel.

(g) Open the valve(s) of separate fuel tank. Check for fuel leakage.

Note: Be sure to unscrew the drain screw to remove all remaining fuel from the fuel sump at the end of each season.

6. **Recommended Periodic Maintenance**

As a state-of-the-art furnace, your heater requires periodic inspection and service by an authorized technician to insure optimum, trouble free performance. This inspection should include: a combustion check; flue pipe check; burner assembly check; cleaning all necessary parts and replacing gaskets as needed. Please ask your authorized Toyostove dealer for details and scheduling. When using *Ultra Low Sulfur Diesel (ULSD)* the heater should be serviced at least every two years because the distillation of *ULSD* is heavier than 1-K Kerosene and No. 1 Fuel Oil. When using 1-K Kerosene or Low Sulfur No. 1 Fuel Oil your heater can be serviced less frequently.

SECTION G: TROUBLESHOOTING

NOTE BEFORE REQUESTING REPAIR AND SERVICES

The following symptoms are normal during operation of the heater.

	CONDITION	REASON
When heater is started or extinguished.	White smoke or smell at initial use after purchase.	Machine oil or dust burns off the surfaces of the burner or heat exchanger.
	Flames flashing for a few minutes after ignition.	The burner is cold and igniter is kept running for a while after ignition.
	Occasionally makes “cracking” noise when heater is ignited or extinguished.	Expansion and shrinkage of metal parts when they are heated or cooled.
	Warm air will not blow as soon as ignited.	To prevent uncomfortable cool air from coming out at the beginning, circulation fan start up is delayed.
	Audible chugging sound from fuel pump when started first time or after running out of fuel.	Air is in the pump. However, noise should stop within 1 minute.*
When heater is in operation.	“Ticking” noise.	Noise of fuel pump in operation. Normal.
	Occasional yellow flickering in blue flame.	Normal.

*If sound from fuel pump does not decrease and heater shuts off, check:

1. Push red reset button on fuel sump. DO NOT hold down.
2. Insure that all valves are open and filter is clear.
3. Insure external fuel tank has fuel and filters are clean.

Should problems arise during operation or ignition, use this chart to determine the cause and the proper steps to take. Be sure to unplug heater and allow to cool completely before taking corrective measures.
In the event that heater should extinguish itself, without any action or your part, you should look to the digital indicator for any of the following error codes.

ERROR CODE	CAUSE	SOLUTION
EE 6 EE 2	Fuel line malfunction Out of fuel	Consult your dealer. Check fuel gauge on fuel tank; refuel.
EE8	Blower motor malfunction	Consult your dealer.
EE 12	High limit switch activated	Clean circulation fan filter and remove any obstructions, allow your heater to cool completely and re-ignite.
EE 13	Burner thermistor failure	Consult your dealer.
EE 22	Ignition failure three times	Consult your dealer.

SECTION H:
LONG TERM STORAGE

At the close of each heating season, or when you do not plan to use your heater for an extended period, the following procedures are recommended.

1. As the end of the season approaches, calculate your fuel purchases so that you can use up all the fuel you have on hand. When fuel is stored for over six months, its quality may deteriorate. The use of such fuel will have an unfavorable effect on heater operation.

2. If your heater needs any service or repair, now is the time to call your dealer and get it done before storage. That way your heater will be ready for immediate use when the next heating season begins.

3. If you plan to store your heater in place,
   (a) Unplug heater.
   (b) Close the main tank valve.
   (c) Remove all fuel from the fuel sump and clean the fuel strainer.
   (d) Wipe off any stains or dust on heater with a damp cloth, then wipe once again using a dry cloth.
   (e) Cover heater completely with a large plastic bag to protect from dust.

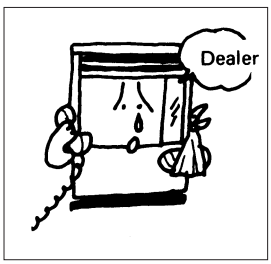

4. To store heater in another location,
   (a) Unplug heater.
   (b) Close the main tank valve.
   (c) Remove all fuel from the fuel sump and clean the fuel strainer.
   (d) Disconnect fuel line and flue pipe from the heater.
   Note: Fuel remaining in the fuel line may flow out when fuel line is disconnected. Have a container ready to catch drainage.
   (e) Remove any soot accumulated in the flue pipe using a brush and/or vacuum cleaner.
   (f) Wipe off any stains or dust on heater with a damp cloth, then wipe once again using a dry cloth.
   (g) Put the heater in the original shipping box, and store in a dry place. If original shipping box is not available, cover the heater completely with a large plastic bag to protect from dust during storage.
   (h) Plug exhaust and air intake openings of the flue pipe by using optional caps.
   (Part #20479845 and #20474949)

TRANSPORTATION

Take the following measures to avoid fuel leakage during the transportation of the heater.
- Always move the heater in an upright position.
- Always drain fuel from the fuel sump before transportation.

SECTION I: INSTALLATION

TOOLS NEEDED FOR INSTALLATION

Tool	Use
Phillips Head Screwdriver	Installation of flue pipe, etc.
Electric Drill	Drilling hole in wall for flue pipe
Hole Saw, 2-3/4 to 3" diameter	Making hole in wall for flue pipe

STANDARD INSTALLATION PARTS

The following standard installation parts are enclosed with heater. For alternate installation methods, you may need to purchase additional accessories which are available from your TOYOSTOVE dealer. See "Accessory Parts".

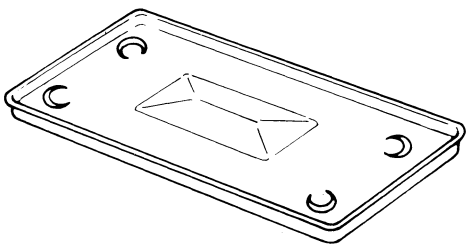 Drip Tray (1) (PART #20479529)	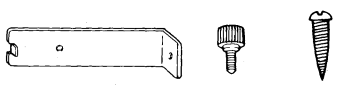 Wall Brackets (2 sets) (PART #20479562)
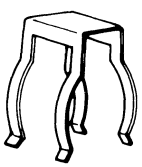 Pipe Holder (1) (PART #20474963)	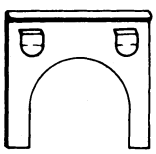 Pipe Stopper (1) (PART #20474964)

(3) Flue Pipe (1) (PART #20479891) Exhaust Air Cap (1) (PART #20479845) Intake Air Cap (1) (PART #20474949)	15-3/4" Inlet Hose (1) (PART #20474951)
3-1/2" 8-1/4" Bent Joint (1) (PART #20479584)	L-Shaped Hose (2) (PART #20474975)
Oil Catch (1) (PART #20474925)	Hose Band (2) (PART #20474977)
10-5/8" Insulating Cloth Cover (1) (PART #20474955)	(3) Spacer (1) (PART #20478967)

ACCESSORY PARTS

The following accessory parts are available for use in non-standard installation of the Laser 30. After giving careful consideration to your desired heater and flue pipe locations and fueling system, consult your TOYOSTOVE dealer to purchase the necessary accessory parts.

Important: Use only genuine TOYOSTOVE parts for you heater. Use of unauthorized generic or other brand parts can severely reduce performance and safety, and will invalidate factory warranty.

Accessory	Part No.	Application
Extension pipe kit (L)*	20479898	Extends pipe system by 61-3/4 to 78-3/4"
Extension pipe kit (M)*	20479897	Extends pipe system by 22-1/2 to 39-3/8"
Extension pipe kit (S)*	20479896	Extends pipe system by 12-5/8 to 19-5/8"
L-Shaped exhaust joint*	20479861	For 90 degree bend in exhaust pipe
Fuel lifter pump Model OPT-91UL	20477500	Used to lift fuel to heater when fuel tank is located underground or outdoors in a position lower than the heater. With automatic recovery.
Extension flue pipe	20479887	For installation in wall thicknesses from 9 inches to 13 inches.
External Fuel Supply Installation Kit	10005098	For installation of external tank system
Pressure reducing valve	10005099	See Note on page 29.

* Total length of extension pipe between heater and flue pipe must be no greater than 10 ft. No more than three bends may be used in extension pipe.

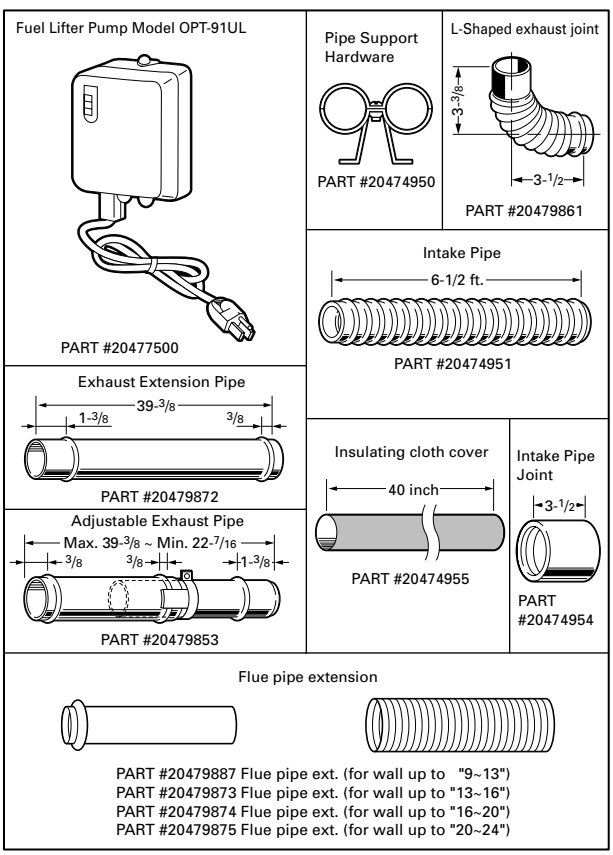

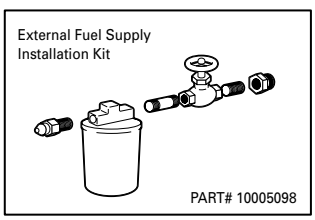

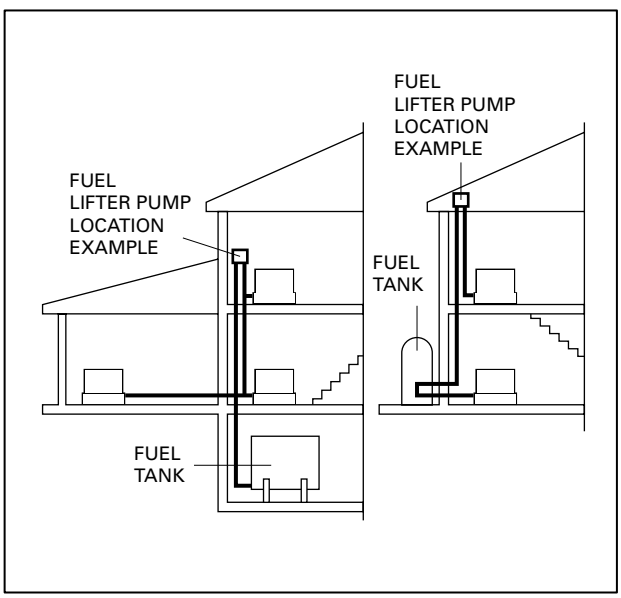

EXTENSION KIT

Extension Pipe Kit (L) PART #20479898

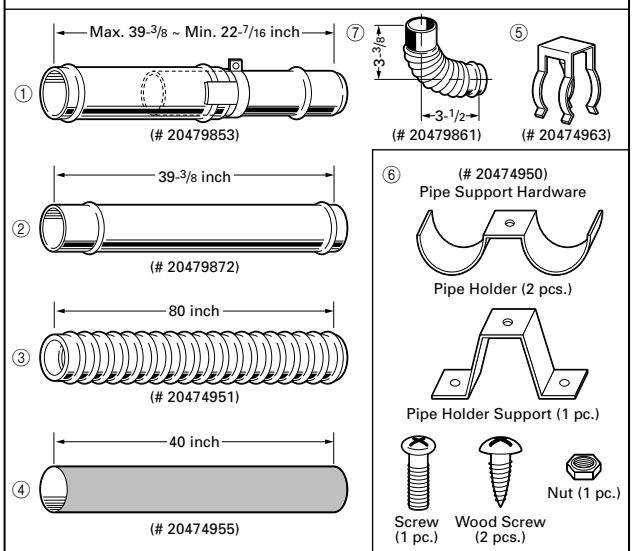

No.	Name of Part	Q'ty
①	Adjustable Exhaust Pipe Max. 39-3/8~ 22-7/16	1
②	Exhaust Extension Pipe (long, 39-3/8 inch)	1
③	Intake Pipe (80 inch)	1
④	Insulating cloth cover (40 inch)	2
⑤	Pipe Holder	2
⑥	Pipe Support Hardware	3 sets
⑦	L-Shaped Exhaust Joint	1

Figure 1

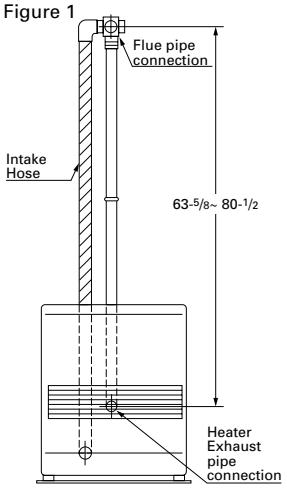

When using the "Extension pipe (L)" extension kit, the distance between the heater exhaust pipe connection and the flue pipe connection must be at least 63-5/8 inch but no more than 80-1/2 inch. (See Figure 1 for reference.)

INSTALLATION WITH EXTENSION PIPE KIT (L)

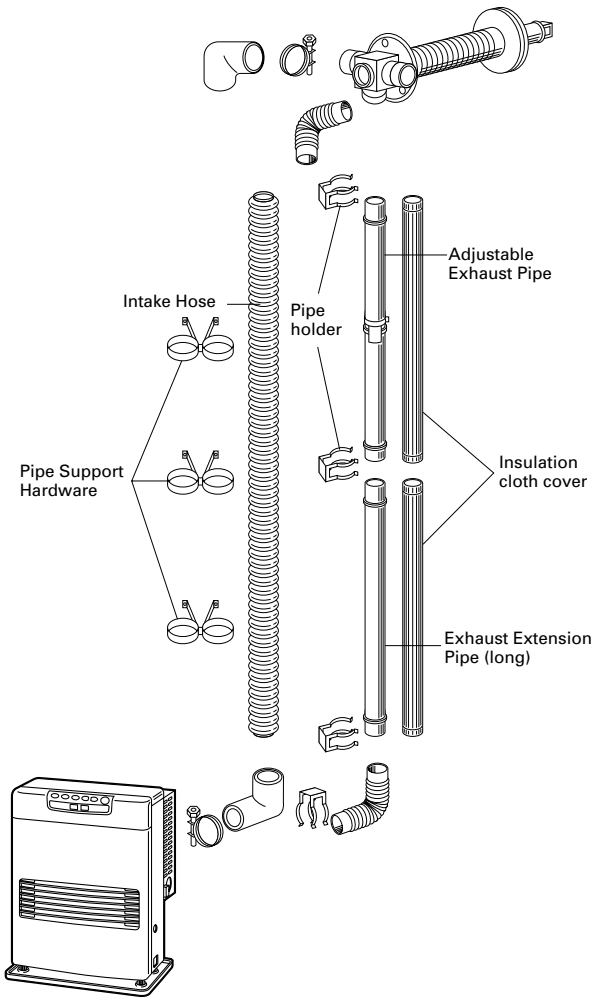

NOTE: Use "L"-shaped Exhaust Joint if necessary.

Extension Pipe Kit (M) PART #20479897

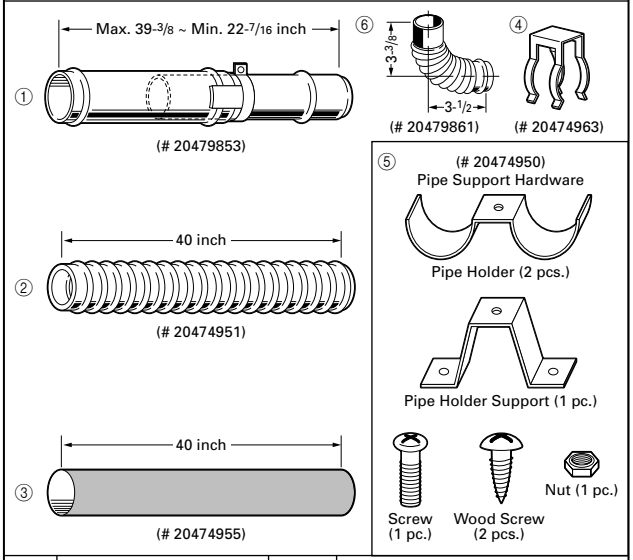

No.	Name of Part	Q'ty
①	Adjustable Exhaust Pipe Max. 39-3/8~ Min. 22-7/16	1
②	Intake Pipe (40 inch)	1
③	Insulating cloth cover (40 inch)	1
④	Pipe Holder	2
⑤	Pipe Support Hardware	2 sets
⑥	L-Shaped Exhaust Joint	1

Figure 2

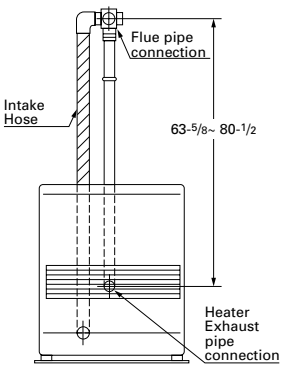

When using the "Extension pipe (M)" extension kit, the distance between the heater exhaust pipe connection and the flue pipe connection must be at least 25-5/8 inch but no more than 42-1/2 inch. (See Figure 2 for reference.)

Extension Pipe Kit (S) PART #20479896

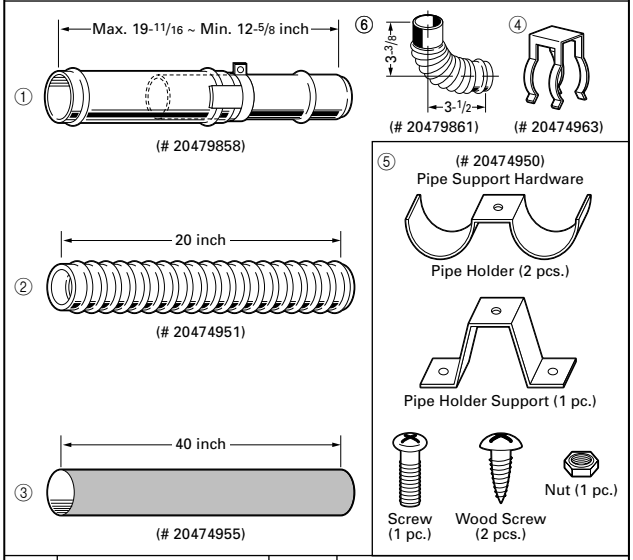

No.	Name of Part	Q'ty
①	Adjustable Exhaust Pipe Max. 19-11/16~ Min. 12-5/8	1
②	Intake Pipe (20 inch)	1
③	Insulating cloth cover (40 inch)	1
④	Pipe Holder	2
⑤	Pipe Support Hardware	1 sets
⑥	L-Shaped Exhaust Joint	1

Figure 3

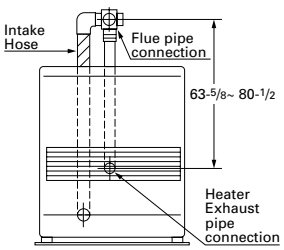

When using the "Extension pipe (S)" extension kit, the distance between the heater exhaust pipe connection and the flue pipe connection must be at least 15-3/4 inch but no more than 22-3/4 inch. (See Figure 3 for reference.)

SAFETY TIPS FOR INSTALLATION

Follow the safety tips below when planning the installation of your Laser 30.

1. Intake and exhaust flue pipe openings must be fully exposed to outside air. Do not vent into chimney, garage, basement under the floor, or into any enclosed area.

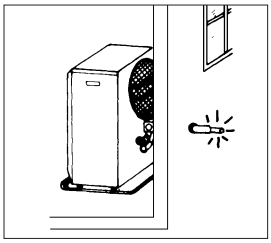

2. Do not install flue pipe in close proximity to other objects or materials (See page 22).

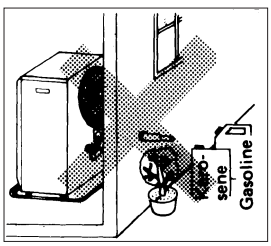

3. Before making a hole in your wall for the flue pipe, make sure the area is free of electrical wires, gas pipes and other obstacles.

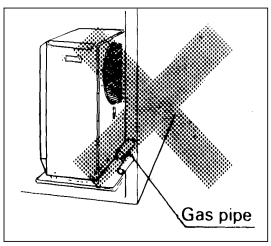

4. Do not install flue pipe where it will be exposed to heavy snow collected leaves or strong drafts.

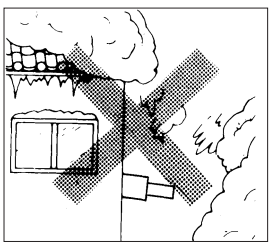

Important:
In areas of heavy snow falls, ground surface clearance must be increased according to average snow falls.

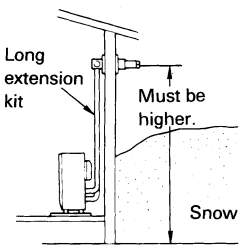

Important:
In open area with strong wind, a wind break may be necessary.

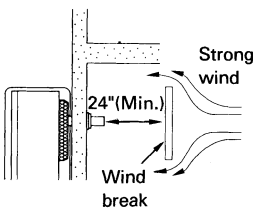

5. Do not install the flue pipe down from the heater nor into chimney.

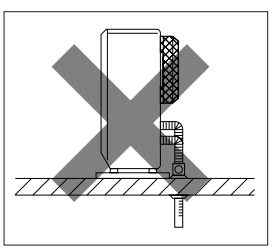

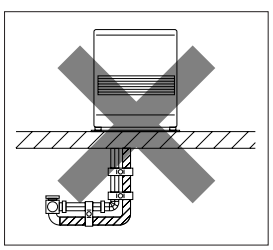

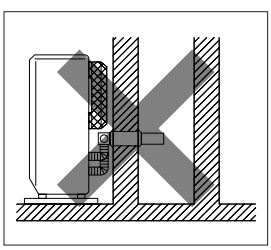

6. Total length of extension pipe between heater and flue pipe must be no greater than 10 ft. and 3 bends may be used.
   NOTE: When using extension pipes always cover the exhaust pipe with the insulating cloth cover.

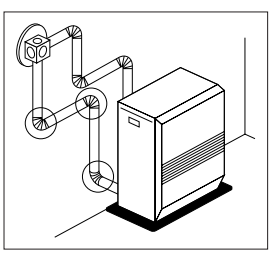

INSTALLATION OF HEATER AND FLUE PIPE

IMPORTANT: Check and comply with all state and local codes that may apply to vented heaters before beginning installation.

NOTE: This heater is designed to be used at altitudes up to 3,000 FT. above sea level.
For use at altitudes higher than 3,000 FT. and up to 6,000 FT., adjustments to the heater must be made. Consult with your dealer.

1. Select heater location. Allow clearances as indicated below between heater and all other materials. (See Fig. 1)

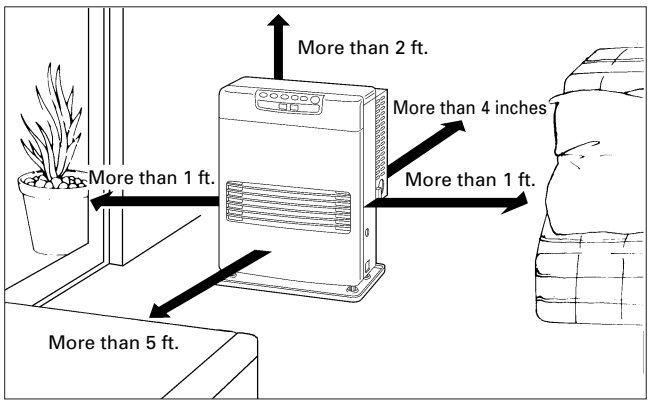

Fig. 1

* Zero clearance is allowed between rear guards and all other materials to the rear of the heater.

2. Make sure that the outside area to where the standard flue pipe will reach is clear of any objects. (See Fig. 2 & 3)

CAUTION! The standard flue pipe installation, as shown in Fig. 2, is for wall thickness from 4 in. to 9 in. ONLY.

NOTE: For wall thickness more than 9 in., refer to page 18 for available flue pipe extensions.

NOTE: The flue pipe can be installed through any standard building materials.

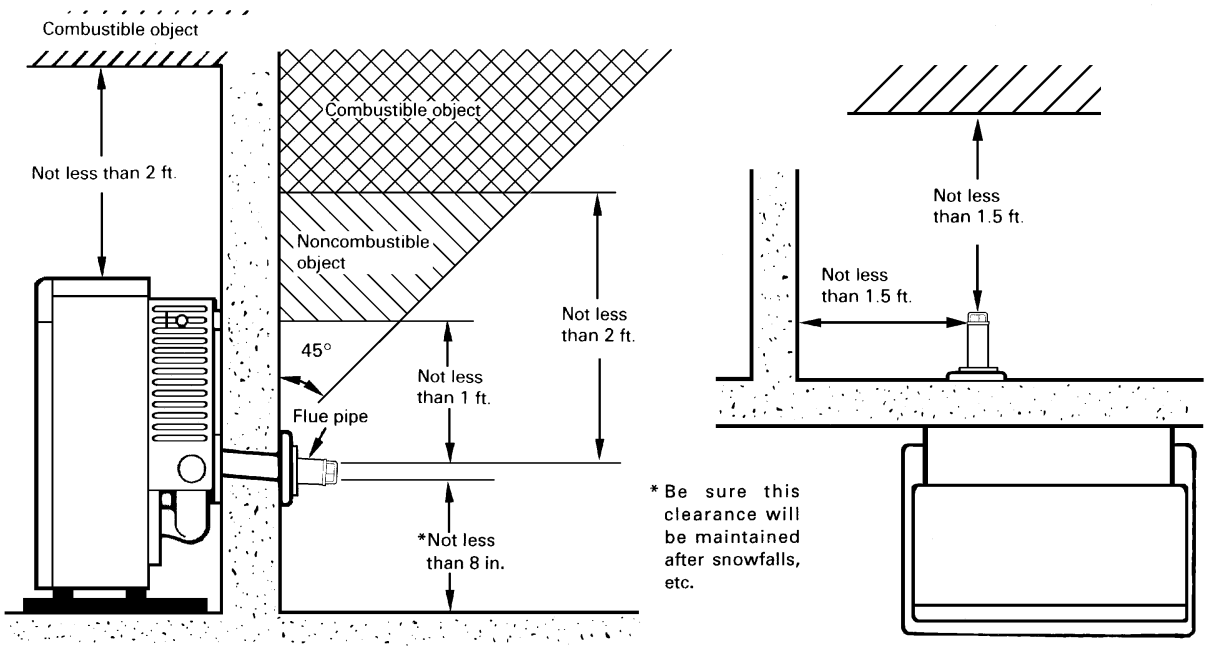

Fig. 2 <Standard Flue Pipe Installation> Fig. 3

3. For standard installation, use the template enclosed with the heater to position the hole for the flue pipe. Tack or tape template to the wall at the desired position (See Fig. 4)

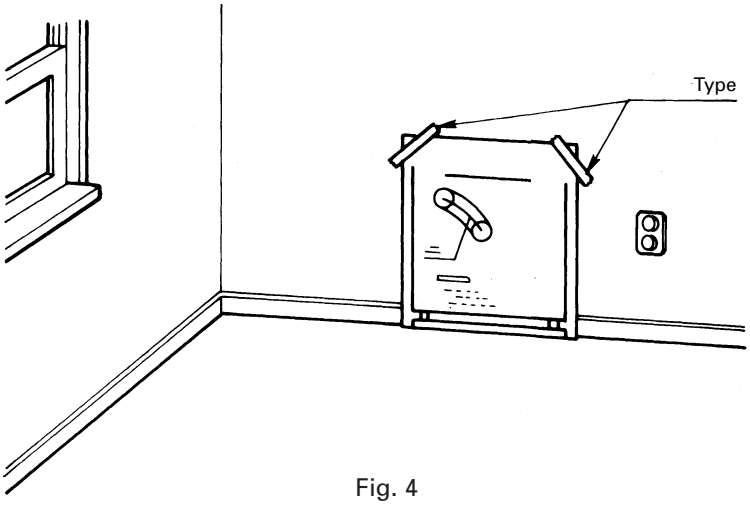

Fig. 4

NOTE: Heater should be installed on a sturdy floor that is level and flat.

NOTE: The template can be adjusted for use of non-standard installations such as the use of extension pipe kits.

4. Cut the hole for the flue pipe from inside the room. Use a 2-3/4 to 3" diameter hole saw attached to an electric drill (See Fig. 5). The opening on the inside wall should be slightly higher than the outside opening (approximately 1/4") so that the flue pipe will slope slightly downward (approximately 2 degrees) after it is installed (See Fig. 6). This will enable the draining of condensed moisture from the flue pipe to the outside and prevent rain or snow entering from outside after installation.

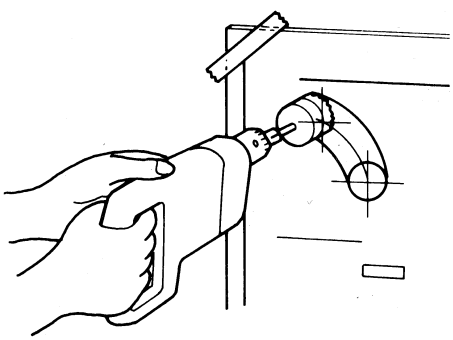

Fig. 5

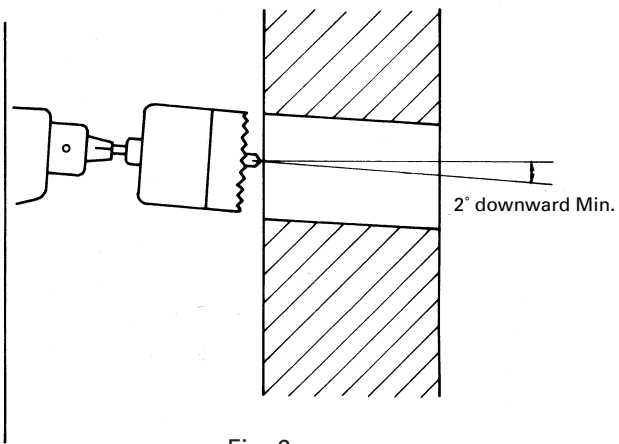

Fig. 6

NOTE: After the cutting of the hole is completed, remove the template from the wall.

5. Install the inner flue pipe.

a. For wall thickness 5-3/16" to 9"
From inside the room, insert the inner flue pipe through the hole. Make sure the arrow on the inner flue pipe is pointing up. Secure the inner flue pipe to the wall with the three wood screws. (See Fig. 7)

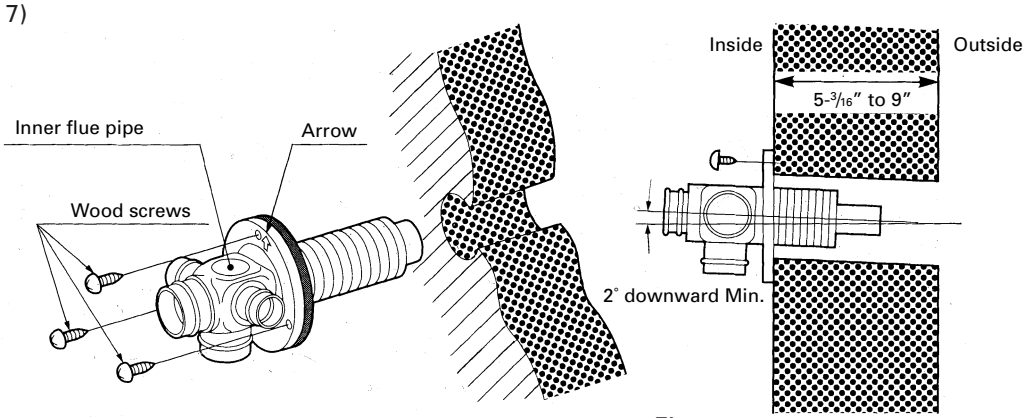

Fig. 7

b. For wall thickness 4" to 5-3/16"
In the event that the wall is too thin, use the spacer as indicated in Fig. 8.
When using the spacer, it may be hard to move the heater to the wall closely.

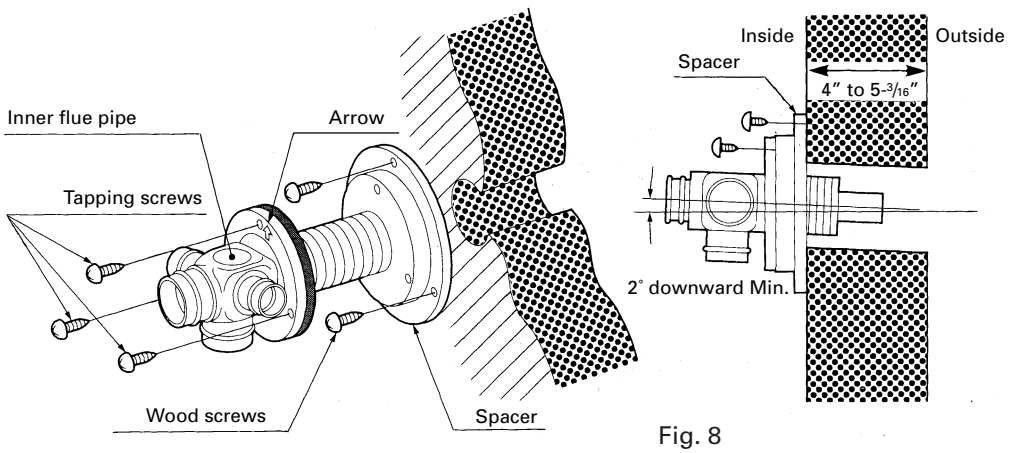

Fig. 8

c. From outside, insert the outer flue pipe through the hole. Secure the outer flue pipe to the wall by turning it clockwise. This locks the two halves together (See fig. 9).

NOTE: Make sure the arrow on the outer flue pipe flange is pointing up.
Make sure to secure the outer flue pipe well. (A-part shown in Fig. 9)

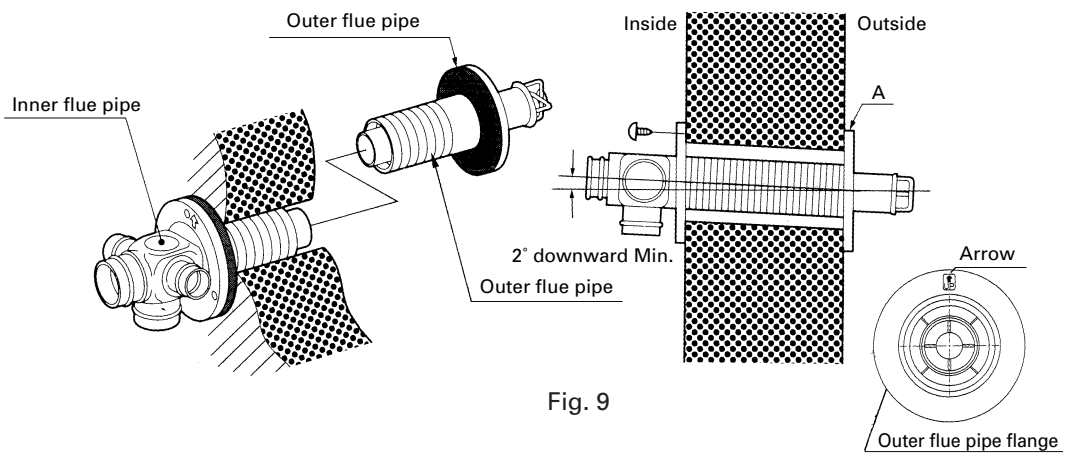

Fig. 9

6. Insert the bent joint to the exhaust opening of the standard flue pipe. Cut the inlet hose for desired length if necessary. Attach the L-shaped hose to each end of the inlet hose and attach the L-shaped hose to the intake opening of the standard flue pipe. Secure the L-shaped hose to the intake opening with the hose band. Plug the unused exhaust and intake opening with the caps provided with the heater. Make sure the caps fit tightly onto the opening (See Fig. 10).

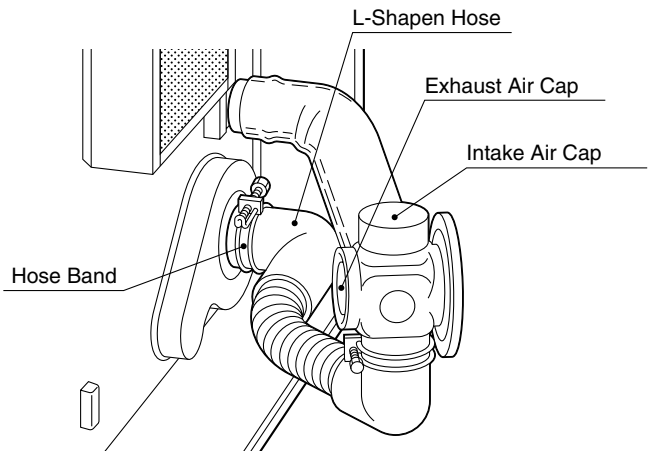

Fig. 10

NOTE: If the inlet hose is not smoothly inserted into the L-shaped hose, apply water or soap suds to the inlet hose.

7. Move the heater into position. Remove the filter and the two (2) screws holding the upper rear cover. Connect the bent joint to the exhaust outlet opening and attach the L-shaped hose to the intake inlet opening. Make sure all connections are tight (See Fig. 11).

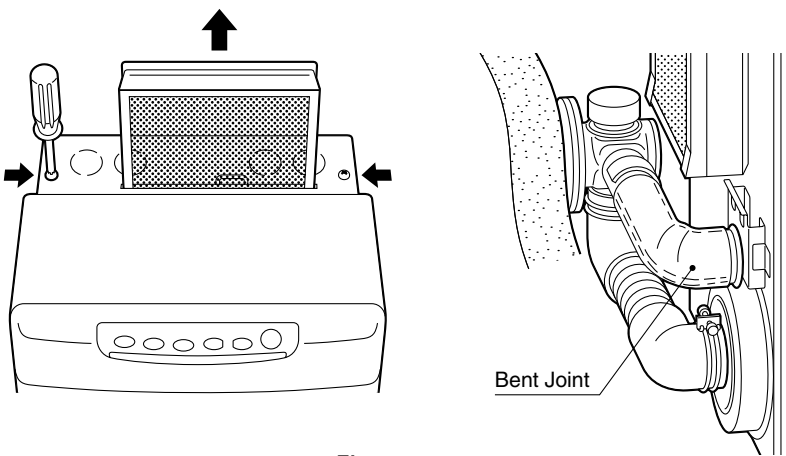

Fig. 11

8. Secure the L-shaped hose to the intake inlet opening with the hose band. Secure the bent joint to the standard flue pipe with the pipe holder (If the extension pipe is used, also attach the pipe holder to the connection of the bent joint and the extension pipe). Secure the bent joint (or the extension pipe) to the exhaust outlet opening by sliding the pipe stopper into the exhaust opening bracket (See Fig. 12).

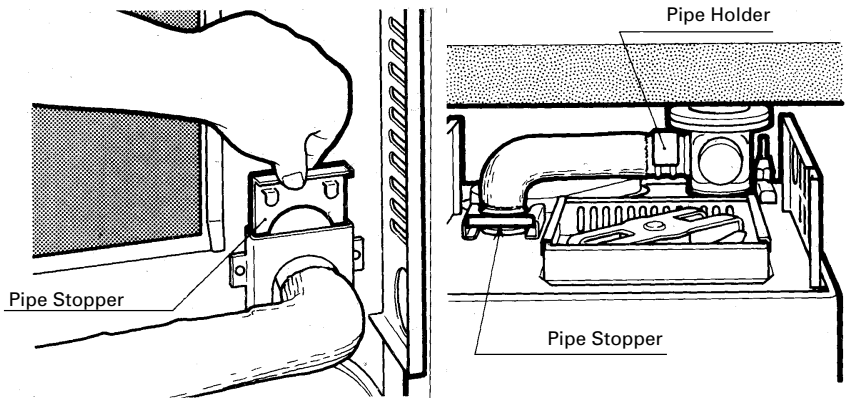

Fig. 12

9. Make sure the position of the heater is level by using the plumb bob located at the right side of the heater. The plumb bob weight should be within the circle. If the plumb bob weight is not within the circle, adjust the heater legs until the plumb bob weight is within the red circle (See Fig. 13 & 14).

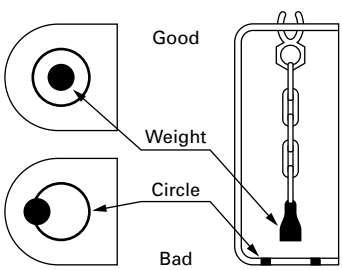

Plumb bob as viewed from above

Fig. 13

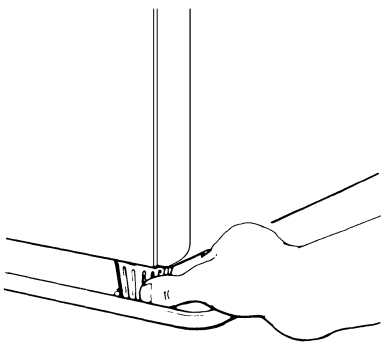

Fig. 14

10. A room temperature sensor is provided with approximately 8 feet long extension wire. It is located on the rear of the cabinet. Make sure that the extension wire is not touching the exhaust pipe. The room temperature sensor can be installed either with the self adhesive tape on the back or with a wood screw provided with the sensor depending on the type of surface chosen for installation.
    NOTE: Choose a location for the sensor that is not in the path of direct sunlight, drafts or the flow of warm air from the heater.

    (a) Self Adhesive Tape
    Peel off the protective tape on the back of the sensor and expose the adhesives. Place the sensor on the desired location on the wall and press down.

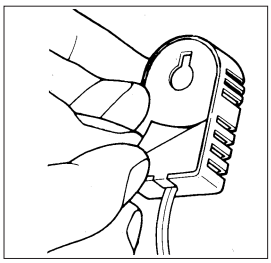

    (b) Wood Screw
    Screw down the wood screw provided with the heater into the desired location on the wall. Hook the back of the room temperature sensor.

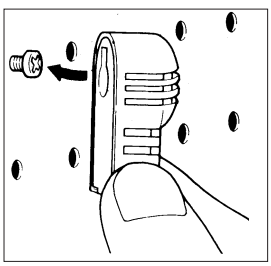

11. After installation is completed, secure heater to the wall with the wall brackets provided with the heater. Make sure the heater is parallel to the wall (See Fig. 15).

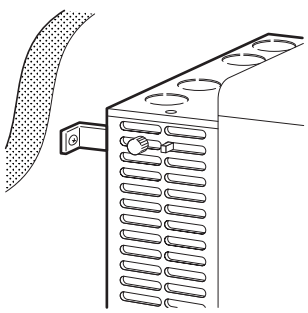

Fig. 15

13. Before ignition, recheck the following;
    a. All connections are tight and firm.
    b. The heater and the standard flue pipe areas are free of any materials.
    c. The heater is level and parallel to the wall.
    d. The exhaust and the intake holes of the standard flue pipe are fully exposed to outdoor air, but not protruded too far from the wall sleeve.

PERMANENT WIRING INSTALLATION

WARNING: MAKE SURE POWER SUPPLY CORD IS DISCONNECTED TO AVOID ANY ELECTRIC SHOCK BEFORE SERVICING. ELECTRIC SHOCK MAY CAUSE SERIOUS INJURY.
INSTALLATION SHOULD BE CONDUCTED BY A LICENSED ELECTRICIAN.

Step 1.
Disconnect power supply cord from power source.
Remove three (3) screws and control box cover on the back of the heater.

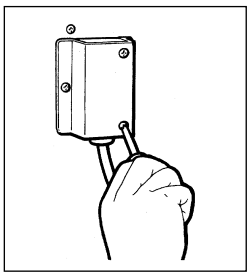

Step 2.
Disconnect ground wire (green wire) from the power supply cord bracket.

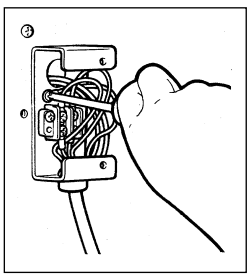

Step 3.
Disconnect two power supply wires from right side of the terminal.

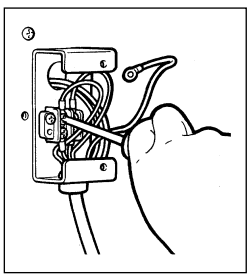

Step 4.
Squeeze strain relief with the adjustable pliers to remove plastic bushing from the power supply cord bracket.
Remove the power supply cord.

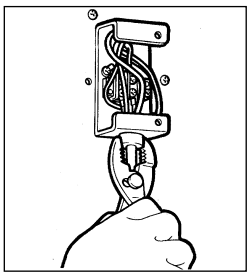

Step 5.
Insert the power supply cable from junction box and connect ground wire to the power supply cord bracket and power wires to the terminals.

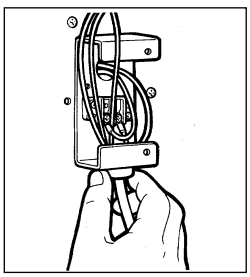

Step 6.
Affix the control box cover to the heater and insert screws.

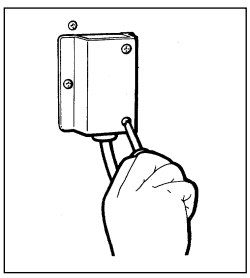

NOTE: Emergency power supply and use of 12V DC batteries and an inverter. Consult your dealer before attempting to use a battery/inverter system to provide power for your Laser heater. These units require true sine wave power for proper long-term operation. Some modified sine wave inverters can be used to provide short-term emergency power but some types of modified sine wave inverters will cause damage to the electrical components of the heater. Several inverter manufacturers offer true sine wave inverters which should operate the unit without any problems if properly sized and configured. If you have any questions about appropriate power supply, consult your authorized TOYOSTOVE dealer.

SECTION J: FUELING

WARNING: Use ASTM D3699 1-K Kerosene, ASTM D396 Low Sulfur No.1 Fuel Oil, or ASTM D975 Ultra Low Sulfur Diesel (ULSD). NEVER USE GASOLINE. Use of gasoline can lead to uncontrollable flames resulting in destructive fire.

FUEL SYSTEM OPTIONS

- **Large Capacity External Tank**

Tank must be purchased separately and installed by a qualified fuel supply technician.

EXTERNAL TANK INSTALLATION

NOTE: External tank installation must comply with National Fire Protection Association Code NFPA 31 or locally applicable codes. Check with local building officials.

The following instructions should be followed for installation of a large capacity, gravity-fed external fuel tank.

- Installation height of tank's fuel outlet should be at least 16 in. above floor surface upon which heater rests.
- To avoid excess fuel pressure to heater, top of fuel tank should be no more than 8-1/2 ft. above floor surface upon which heater rests.
- Fuel tank should be located at least 6 ft. away from all heat sources.
- 3/8" OD copper tubing should be used for fuel line.
- To prevent air locks in fuel line, fuel line should be smooth with no U-shaped or sharp bends.
- Install a UL listed fuel filter at the fuel tank outlet **(it is highly recommended to use an in-line small mesh size filter with water block, e.g. 10 micro filter)**. Shout-off valves should also be installed on the fuel line and connected the tank as illustrated on page 30.

NOTE: An additional shut-off valve installed next to the exterior wall will minimize fuel to be drained should heater have to be disconnected. If the valve is on interior side, a fusible link type is recommended.

1. Be sure all external tanks have an operating vent.
2. Be sure to observe the maximum and minimum tank heights as specified.

NOTE: If the maximum height from the top of the fuel tank to the bottom of the heater exceeds 8-1/2 ft., a fuel pressure reducing valve, preset at 2.5 psi, is required.
Pressure Reducing Valve Part#10005099 has 3/8 in. (N.P.T.) inlet and outlet female openings to accept the fuel line fittings.

NOTE: Fusible Link Valve (#10005597)

- It is most important that the valve, depending on its use, be fully opened or fully closed.
- The top nut on the valve (below the turn handle) is sealed and should never be tightened or removed.
- When installing fuel lines to the valve, be sure to check for fuel leakage.
- A LEAKING VALVE MUST ALWAYS BE REPLACED.

NOTE: The fusible link valve is in the open position when the valve stem appears above the center of the turn handle as shown in the illustration.

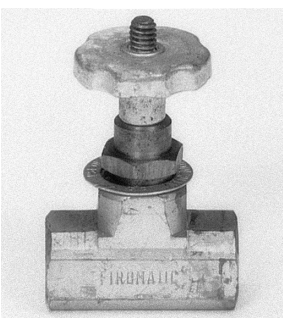

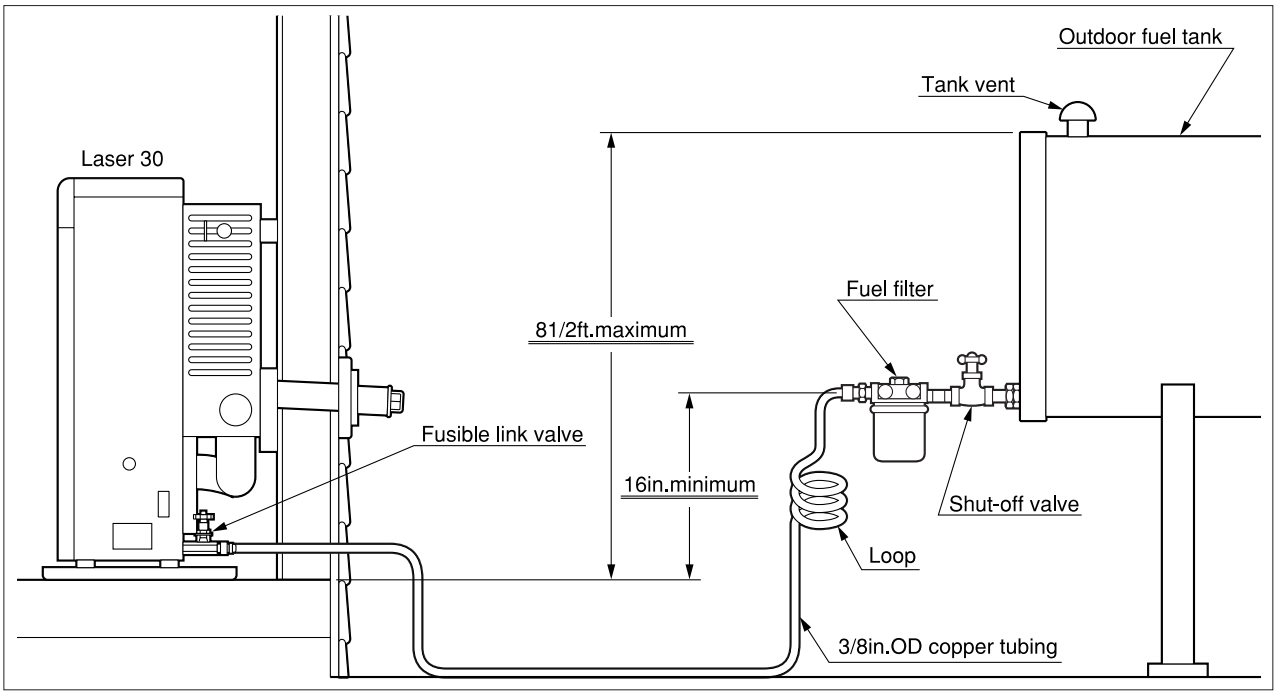
Outdoor fuel tank
Tank vent
Laser 30
Fuel filter
81/2ft.maximum
Fusible link valve
16in.minimum
Shut-off valve
Loop
3/8in.OD copper tubing

LIMITED WARRANTY

TOYOTOMI U.S.A., INC.("TOYOTOMI") warrants each product and any parts thereof sold by it to be free from defects in materials or workmanship under normal use and service for TWELVE (12) MONTHS* from the date of delivery to the original purchaser at retail subject to the following terms and conditions :

WHAT IS COVERED : Product or any parts thereof which are defective in materials of workmanship.

WHAT IS NOT COVERED :
(1) This warranty does not extend to any defect due to the negligence of others: failure to install, operate, or maintain unit in accordance with instructions (Installation and Operation instructions are furnished with each new unit); unreasonable use; accidents; alteration, use of unauthorized or non-standardized TOYOTOMI parts and accessories; electrical malfunction, i.e., as resulting from large power surges, short circuit, etc.; incorrect installation; use of any fuel other than that specified in owner's manuals; or repair by anyone other than a service facility specified by TOYOTOMI.
(2) Normal wear and tear of parts, including hoses, wires, burner mats, fuel nozzles, filters and accessories.
(3) This warranty does not cover shipping costs.

WHO IS COVERED : The original purchaser at retail.

WHAT WE WILL DO : TOYOTOMI will either repair or replace, at its option, all defective parts free of charge that are covered by this limited warranty on a carry-in basis, to your nearest authorized dealer or distributor of TOYOTOMI.

WHAT YOU MUST DO FOR WARRANTY SERVICE : You must return the defective Product or part to any authorized dealer or distributor of TOYOTOMI with this LIMITED WARRANTY and a copy of your bill of sale or credit card charge receipt or other documents evidencing the date of the Product's delivery, if service is not available locally, please contact our CUSTOMER RELATIONS DEPARTMENT at :

TOYOTOMI U.S.A., INC.
604 Federal Road, Brookfield, CT 06804
(203)775-1909

THE FOREGOING EXPRESSES ALL OF TOYOTOMI'S OBLIGATIONS AND LIABILITIES WITH RESPECT TO THE QUALITY OF PRODUCT FURNISHED BY IT. ALL OTHER WARRANTIES, EXPRESSED OR IMPLIED, INCLUDING THE WARRANTIES OF MERCHANTABILITY OR FITNESS FOR A PARTICULAR PURPOSE ARE DISCLAIMED. TOYOTOMI SHALL NOT BE LIABLE FOR THE LOSS OF USE OF THE PRODUCT, INCONVENIENCE, LOSS OR ANY OTHER DAMAGES, DIRECT OR CONSEQUENTIAL ARISING OUT OF, THE USE OF, OR INABILITY TO USE, THE PRODUCT OR DAMAGES RESULTING FROM OR ATTRIBUTABLE TO DEFECTS IN THE PRODUCT.

No one other than TOYOTOMI has authority to extend or modify the terms of this Limited Warranty in any manner whatsoever.

Some states or provinces do not allow the exclusion or limitation of incidental or consequential damages or limitations on how long an implied warranty lasts, so these limitations or exclusions may not apply to you. This Limited Warranty gives you specific legal rights and you may also have other rights that vary from state to state, or province to province.

* In addition to the warranty period stated above, an extended two (2) year warranty (3 years from date of purchase) is on for the following parts. :

1.Vented Heater :
- A. Burner Pot
- B. Heat Chamber (Excluding Glass Cylinder)
- C. Heat Exchanger

2.Hot Water Heater :
- A. Burner Top
- B. Heat Exchanger

NOTE : THE EXTENDED WARRANTY POLICY IS APPLICABLE ONLY FOR THE REPLACEMENT OF THE ORIGINAL FACTORY-INSTALLED PARTS THAT HAVE FAILED WITHIN THE TIME LIMITATIONS AS INDICATED. REPLACEMENT PARTS ARE WARRANTED FOR THE REMAINDER OF THE ORIGINAL PART WARRANTY PERIOD. LABOR IS NOT COVERED ON THE EXTENDED WARRANTY.

6098002060

TOYOSTOVE®
TOYOTOMI

TOYOTOMI U.S.A., INC.
604 Federal Road, Brookfield, CT 06804
www.toyotomiusa.com

Rev. 2/08
Part #20479694
Printed in Japan